AUTOTURN PRO™

INDUSTRY LEADING SOFTWARE

Your total solution for simulating vehicle maneuvers

MODEL, ANALYZE, AND VISUALIZE IN 3D

10.1

AutoTURN Pro is state-of-the-art CAD software that simulates 3D vehicle turning maneuvers on surface and mesh object terrains. Incorporating the trusted AutoTURN engine together with the patent pending process of generating a three-dimensional vehicle swept path envelope – engineers can design and analyze in 3D while accounting for the effects of different terrain, obstacles, and vehicle parameters.

» INTELLIPATH

Intellipath uses artificial intelligence to automatically generate vehicle movements, minimizing the time it takes to produce simulations.

» AUTOMATED PATHS

Intellipath evaluates hundreds of possible path options to determine if the selected vehicles can make the desired maneuver.

» VEHICLE CIRCULATION ANALYSIS

Define different routes quickly for a design scenario – check as many vehicles and vehicle movements as you need.

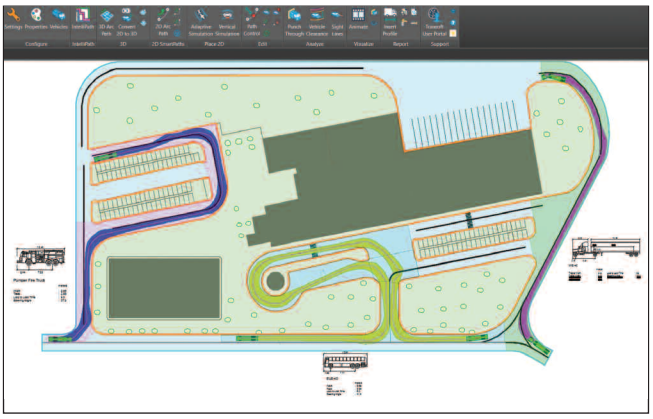

›› IntelliPath is great for design scenarios that involve evaluating multiple design vehicles for a route.

» CUSTOM VEHICLE PROFILES

Use a vehicle profile outline to model the detailed roofline and underside clearances. These models can be used on top of vertical profiles or in 3D, to perform clearance analysis.

» 3D CLEARANCE ANALYSIS

Simulate vehicle maneuvers in 3D to perform ground and vertical clearance analysis. Instantly see conflicts with AutoTURN's Pro unique 3D envelope.

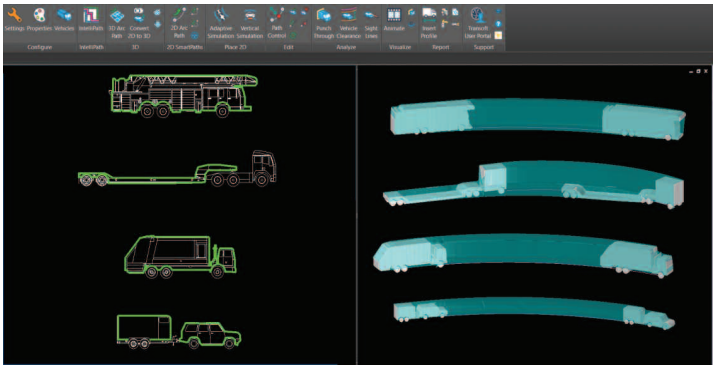

›› Virtually any vehicle profile can now be recreated in 3D.

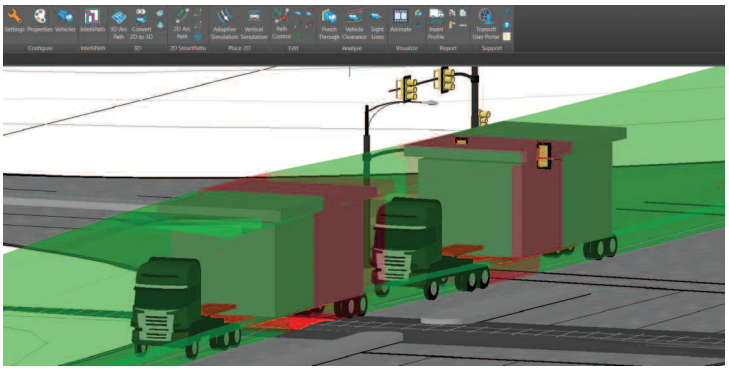

›› Use 3D clearance analysis to check issues you may not see in 2D.

THE WORLD'S MOST WIDELY USED VEHICLE TURN SIMULATION SOFTWARE

CONVERT FROM 2D TO 3D

Create 3D simulations from existing 2D versions by simply clicking the 'Convert 2D to 3D' button.

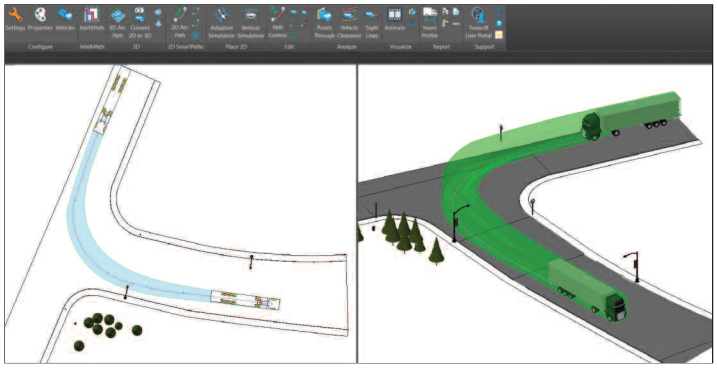

›› Boost your efficiency by completing a 3D view with one click.

3D SPECIALIZED TRANSPORT VEHICLES

Define the steering linkages for specialized transport vehicles to replicate their turning behaviour.

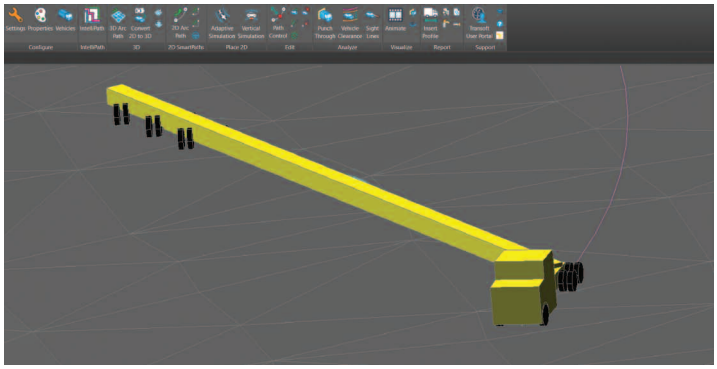

›› Wind blade and booster trailers models can also be used for 3D clearance analysis.

3D LOAD MODELING

Model loads in 3D by specifying the height and elevation of a 2D shape to generate the 3D clearance envelope.

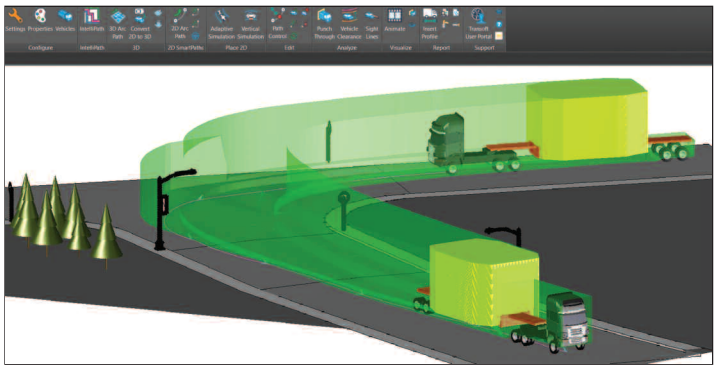

›› Save time modeling complex loads in 3D.

VERTICAL AND GROUND CLEARANCE REPORTING

Create multiple cross sections to quickly assess the available clearances and location of conflicts.

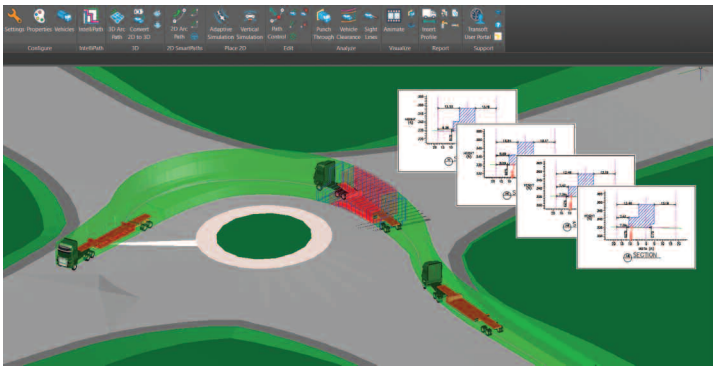

›› Save time as multiple cross sections can be created automatically.

DESIGNS AHEAD OF THE CURVE

AUTOTURN PRO™

AutoTURN is the latest technology for vehicle swept path analysis and modeling. Simulating forward and reverse vehicle turn maneuvers is now quick and easy due to the **four SmartPath Tools interactive drive modes** that incorporate speed, superelevation, lateral friction, and turn radius algorithms.

›› GENERATE ARC PATH

Quickly and easily create turn simulations, such as through roundabouts, by dragging your mouse and clicking from point to point.

›› GENERATE OVERSTEER CORNER

Offers a realistic representation of how a vehicle negotiates tight turning conditions; particularly useful for multi-part, articulated vehicles.

›› GENERATE CORNER PATH

Produce simulations using an entrance and exit tangent with the option of setting a vehicle's speed and radius – ideal for designing intersections.

›› STEER A PATH

For areas with limited maneuvering space, you can freely drive a vehicle at speed by moving the mouse in the desired direction.

» 3D VEHICLE PATH SIMULATIONS

- Place a 3D vehicle simulation on a terrain using geometry for lines, arcs, polylines, and alignments (simulations are reactive and are updated when changes are made to the source geometry)
- Ability to generate a 3D vehicle simulation based on a pre-defined path
- Ability to delete the last section of a 3D simulation for minor editing purposes
- Input the 3D vehicle's starting angle and speed associated with the simulation
- Ability to display radius type and radius value for a 3D vehicle path movement

» 3D DESIGN AND ANALYSIS ABILITIES

- Perform 3D analysis and checks on a terrain (3D faces, mesh and TIN surfaces) based on a 3D simulation or alignment
- Generate a 3D arc path directly on a selected terrain
- Convert 2D turn simulations created with the 2D SmartPath Tools and Place Adaptive Simulation into equivalent 3D turn simulations
- Work with selected terrain generated from: TORUS and NEXUS grading models; AutoCAD® Civil 3D® surface; AutoCAD® polygon or polyface mesh; MicroStation® mesh
- Analyze a cross-section through the 3D swept path at any selected user point for evaluating tunneling, spatial requirements near buildings or overhead clearance to structures
- Analyze both vehicle bottom and overhead clearance requirements on either a straight line path section or paths with curves
- Section of the 3D swept path will display a different color indicating collision with an object or terrain
- Dynamic visual display of 3D articulation along the axis in a vehicle movement simulation

» 3D PRESENTATION AND REPORTING FEATURES

- Use a sample library of 3D realistic vehicles or user imported realistic 3D models for presentations
- Generate reports including ground profile, body profile, punch through slice, and punch through line
- Create a 2D report indicating the top of the vehicle body; lowest point along the path (i.e. ground clearance); obstacles (indicating locations of intersections between the drive path and obstacles)
- **Analyze Punch Through** – draw a cross section of a selected 3D turn simulation at a cutting plane line and create an annotated section detail
- **Analyze Vehicle Clearance** – create a graph showing the longitudinal profile of a 3D turn simulation and crossing elements

» 3D VEHICLES AND CUSTOM VEHICLE CREATION

- Create or import your own 3D drawings for custom vehicles
- Specify three different ground clearances (front, wheelbase, rear) and the front and rear chamfer for a custom 3D vehicle
- Ability to enter customized roofline when creating a 3D vehicle
- Realistic 3D vehicle drawings supplied for the vehicles in the TRANSOFT/TRANSOFTM librarieslibrary database

» TURN SIMULATIONS AND SWEPT PATH ANALYSIS

- Place adaptive vehicle simulations on either centered or offset left/right with a smooth transitions option on user-drawn paths made from lines, arcs, polylines, complex chains and even AutoCAD® Civil 3D® alignments
- Conflict analysis feature provides feedback on vehicle path obstructions
- Use the Regenerate Simulation feature on simulations to account for conflicts that occur after obstacles have been added, removed, or modified
- **SmartPath** tools for forward and reverse vehicle turn simulations in one continuous motion
- Perform 3-part vehicle reverse maneuvers to any vector
- Generate arc, oversteer, offset, and reverse corner simulations
- Generate vehicle swept path envelopes from user-defined vehicle shapes with chamfered corners or filleted radii
- Define and hatch either the vehicle body or the vehicle's outer swept path envelope during a turn simulation
- Evaluate a vehicle simulation on a vertical profile accounting for tracking points, clearances and overhead ceiling line or obstacles
- Perform horizontal sightline analysis based on a polyline, interval and the user specified sight line distance

» ENHANCED PATH CONTROL

Regardless of the supported CAD platform, this tool allows designers to make small adjustments dynamically to the vehicle path by simply dragging the nodes to:

- Adjust the simulation at any position along the path
- Modify the turning radius of a section
- Control the oversteer offsets for Corner Path or Oversteer Corner Path simulations

AUTOTURN PRO™

TAKE ENGINEERING INTO ANOTHER DIMENSION

PRESENTATION CAPABILITIES

- Control simulation playback (play, pause, high-speed scrubbing) through the Run Animation Dialog Box
- Use realistic vehicles plan profiles for simulations and animations
- Manage vehicle animations with Transoft Solutions' presentation software, InVision, to create timed and sequenced events. Export files to video formats for PC viewing

VEHICLE CUSTOMIZATION

- Apply user-defined vehicle dimensions and profiles
- Create vehicles or types for specialized transportation (e.g. rear steering)
- Commonly-used types include: fire trucks, fire engine pumpers, ambulances, garbage collection, semi-trailers, buses (articulated and double articulated), sport utility, pickup, and forklifts
- Add user-defined vehicles and types to the library database
- Work with AutoTURN Extended Vehicle Libraries add-on content

POWERFUL DESIGN ABILITIES

- Set steering linkage ratios for ranges of steering angles between front and back wheels for multi-axle semi-trailers, trucks and articulated buses
- Specify tire sizing (width and diameter) and space between the tires on the same axle for a vehicle
- Choose track width for axle groups independently within a given part
- Place, remove, or recall vehicles, active simulations, and active pathways
- Modify and edit drawn simulations using Path Control
- Add conical lines of sight to check mirror views, blind spots and headlight paths
- Create standard or custom turning templates using template generator
- Manually adjust the path offsets by dragging and moving grip points with graphically display of the radius

VEHICLE LIBRARIES

- Includes national design vehicle standard libraries for: US (AASHTO, NACTO, Caltrans) | Canada (TAC) | Australia (Austroads) | New Zealand UK | France | German | Russia | Italy | Austria | Netherlands | Czech Republic Poland | Sweden | Switzerland | Finland | Norway | Denmark | Iceland Mexico | Brazil | Peru | Korea | India | UAE | South Africa | Israel
- Use specialized vehicle types including: Wind Tower Trailer; Wind Blade Trailer; Beam Transporter I and II; Booster Trailer; 19-axel Heavy Hauler
- Other vehicle libraries: Architectural and Transoft Solutions' Realistic Type

REPORTING FEATURES

- Generate turn simulation reports showing vehicle speed, path lengths, and start conditions at each section of the simulation
- View graph report of a vehicle's steering angle and multi-part vehicle's articulation angles when generating or placing a simulation
- Data can be exported to spreadsheets and standard document formats
- **Speed Profile Report** - Generate report of vehicle speed based on the scanned geometry with elements including Vmax and Vmin, Acceleration/Deceleration and lateral friction per report

COMPATIBILITY

- Autodesk® AutoCAD® 2010 – 2018 series of products(except AutoCAD LT)
- Autodesk® AutoCAD® Civil 3D® 2010 – 2018 surfaces and alignments
- Bentley® MicroStation® V8i, CONNECT®
- Bentley® PowerDraft (V8i), PowerCivil (V8i)
- Bentley® Power GEOPAK (V8i), Power InRoads (V8i)
- Bricsys® BricsCAD® (Pro and Platinum) V16 – V17
- ZWSOFT® ZWCAD® 2017
- System requirements:
  Full support for 32 and 64-bit operating systems
  Workstation: Windows® 7, Windows® 8/8.1, Windows® 10
  Network: Windows® Server 2008, 2012, 2016

HOW TO CONTACT US

NORTH AMERICA - HEAD OFFICE
1.888.244.8387 (Toll Free US and Canada only)
Telephone 1.604.244.8387
Fax 1.604.244.1770
info@transoftsolutions.com

LATIN AMERICA
Telephone 1.604.244.8387
Fax 1.604.244.1770
infoINT@transoftsolutions.com

EUROPE I MIDDLE EAST I AFRICA
NETHERLANDS OFFICE
Telephone +31 10 258 78 78
Fax +31 10 258 78 77
infoEU@transoftsolutions.com

To download our software demos or to find out more information about our products, please visit our website at **www.transoftsolutions.com**

Please note that some products are only available in specific regions and languages.

ASIA PACIFIC I AUSTRALIA I NEW ZEALAND
1.800.107.106 (Toll Free Australia only)
Telephone +61 2 8067 8414
Fax +61 2 8905 9574
infoAUS@transoftsolutions.com

0800 449 662 (New Zealand only)
infoNZ@transoftsolutions.com

ATPRO101_PB_letter_0817